Ann. For. Res. 65(1): 8343-8349, 2022
ISSN: 18448135, 20652445

ANNALS OF FOREST RESEARCH
https://www.e-afr.org/

INFLUENCE OF FEED ROLL GAP ON CLEANING PROPERTIES

Azimdjan Parpiev[a], Ilhom Sabirov[b], Erkin Berdanov[c]
Tashkent Institute of Textile and Light Industry, Tashkent, Uzbekistan
[a]Corresponding author: a.parpiyev1947@gmail.com
[b]i.sabirov@mail.ttyesi.uz
[c]SZABerdanoverkin1985@gmail.com

Abstract: The article is devoted to the improvement of feed rollers supplying cotton to cleaning equipment, and the effect of cleaning on the quality of the feed rollers is herewith studied. In this scientific work, it was experimentally substantiated that, only when the gap between the feed rollers is 300 mm, full retention of the cotton on the feed rollers and the ability to control the cotton processing procedure is fully achieved.Based on experiments, it has been proven that widening the gap between the feed rollers has a positive effect on increasing the spacing, reducing the density of the cotton fed into the drums, preventing damage to the cotton from breaking into small bits and pieces. As a result, the efficiency of cleaning from small and large impurities has increased.The cotton composition ratio also increased due to the increase in the number of single component seeds. One of the most important indicators was the decrease in the amount of free fiber by more than two times. The regression equations characterizing the relationship between the formation of free fibers and repetition of cleaning have been developed. It has been shown that the amount of free fiber formation in the feed rolls used in practice is large, which leads to a decrease in the percentage of fiber recovery from cotton.Analysis of the results obtained shows that one of the main sources of free fibers formation is the intermediate zone (gap) of rollers and pile drums, in which the density of cotton is the main factor of influence. Relevant conclusions and recommendations have been given.
Keywords. Feeder, shaft header, feed rollers, drum, cotton mud, cleaning efficiency, loose fiber, cotton structure ratio, single-seeded fibers, cotton density.

INTRODUCTION

One of the key factors in increasing the efficiency of ginning is the uninterrupted supply of cotton to the ginning process, the implementation of which remains one of the most pressing problems today. [1]

Feeding devices are one of the main working parts of the cleaners, which consist of a mine collector and shovel feed rollers rotating at the same speed opposite each other in the lower part, as well as mechanisms that control their speed [2-3].

The value of the angle of cotton feeding from the feed rollers to the mine collector and the relative small distance between the rollers for transporting cotton to the ginning machine leads to an increase in the density of the cotton [4].

After passing the cotton feed rollers through the impact zone, they move to the cleaning zone using the pile drums. A practical test with existing feed rollers has shown that cotton pieces that are

© ICAS 2022

separated from the compacted cotton by the pile drums are transferred to the cleaner without sufficient crushing [5-6].

A number of studies have been conducted to improve the quality of processed cotton [7-13]. The relationship between machine performances is based on the concentration and distance between the pile drums. The pitch of the feed rolls was chosen from pile drums with a diameter of 250 mm with a pitch of 50 mm. The set of feed rollers must be such that the cotton in the harvester does not fall freely, and that the rollers change the working efficiency [14-15].

Most of the studies did not take into account the formation of free fiber as a result of the interaction of the pile drum with the compacted cotton coming out of the supplying cotton rollers.

When studying the processes of cleaning cotton, it is necessary to take into account the coefficient of the structural composition of cotton, which affects the efficiency of cleaning cotton [15]. The coefficient is determined using the following formula:

or

Where M is the number of cotton pieces; N- a number of fibrous individual seeds in the sample.

The article explores the possibilities of reducing the density of cotton delivered to the pile drum by expanding the range of supply rollers.

A METHODOLOGY OF CONDUCTING THE EXPERIMENTS.

The experiments were performed on a machine consisting of 8 pile drums and 2 saw drums, type S65-24, with a cotton moisture content of 8.9% and a contamination of 13.93%.

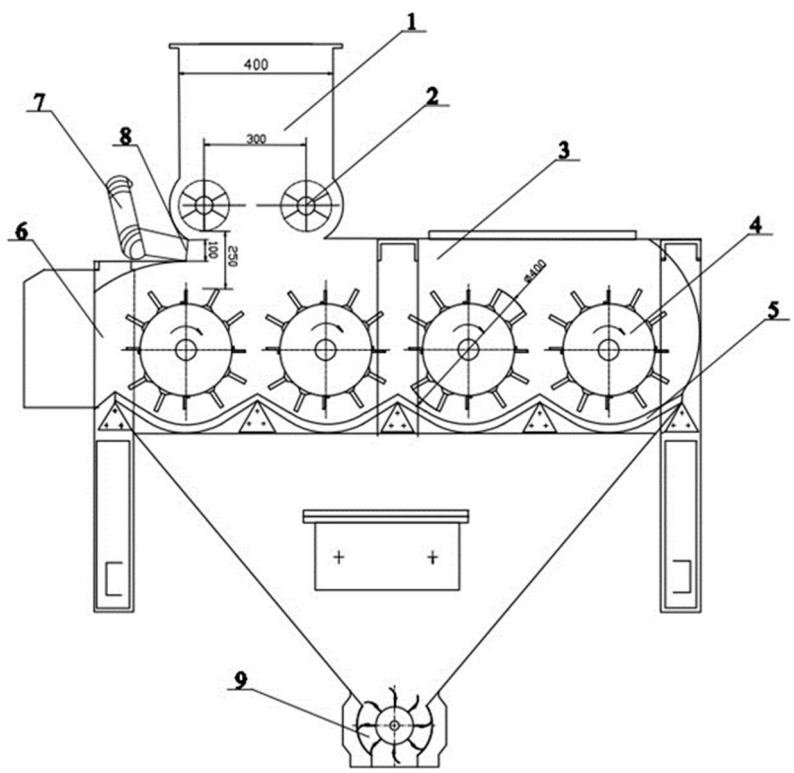

FIGURE 1. Experimental equipment

1-Pit; 2 Supply rollers; 3- Cotton ginning and heating zone; 4- Pile-bar drum; 5- Grid surface; 6- Cotton outlet; 7- Hot air supply pipe; 8- Air outlet; 9- Vacuum valves.

4.5 tons of cotton were twice tested using machinery, samples were taken, cotton contamination, free fiber and structural composition were determined. The gap in the experimental rollers was set at 250 - 300 - 350 mm. When the supply roller spacing was adjusted at 350 mm, it was observed that the cotton fell between the rollers and the ability to fully control the work productivity was reduced. When the supply roller spacing was set at 300 mm, the stable performance of a feeding was determined and the cleaning performance was compared with the option with a spacing gap of 250 mm. To determine the coefficient of structural composition of cotton, 100 g of cotton was used first. The cotton pieces were sampled and sorted according to the number of seeds in them, and the value of m was determined using formula (1). To determine the free fiber, another 100 g. of cotton was sampled and manually separated from the fiber and determined using the following formula:

$$E_t = \frac{M_{e.t}}{M_n} \cdot 100\% \quad (2)$$

Where: Me.t.- weight of isolated free fiber, Mn - sample weight. The results of the experiment are shown in Table 1 and Figure 1.

TABLE 1. Effect of cleaning a gap between supply rollers

№	Gap distance between rollers is 300 мм						Gap distance between rollers is 250 мм					
	Cotton filthiness %			Cleaning efficiency			Cotton filthiness %			Cleaning efficiency		
	Small	Large	General	Small	Large	General	Small	Large	General	Small	Large	General
	Initial filthiness											
1	10,26	3,67	13,93	-	-	-	10,26	3,67	13,93	-	-	-
	1-run											
	3,11	1,16	4,27	69,7	68,4	69,3	3,7	1,5	5,2	63,9	59,1	62,7
	2-run											
	1,57	0,77	2,34	84,7	79,0	83,2	1,79	1,15	2,93	82,6	68,7	79,0

© ICAS 2022

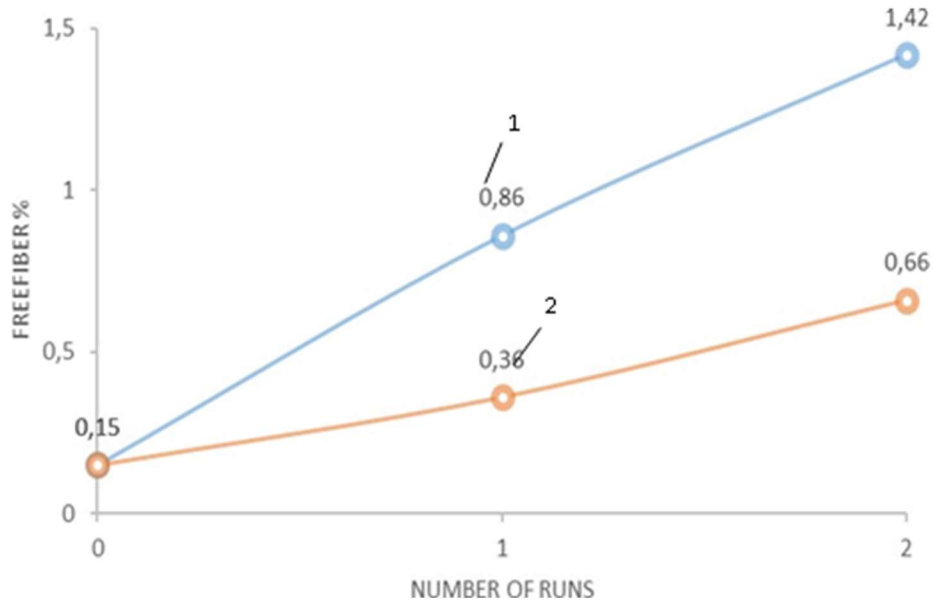

FIGURE 2. Supply rollers range 1-250 mm, 2-300 mm.

The results show that when the range of supply rollers was expanded from 250 mm to 300 mm, it was observed that the cleaning efficiency was high and the free fiber was low. The cleaning efficiency was 5.8 and 9.3% higher in the 300 mm range compared to 250 mm in the 1st pass on fine and coarse contaminants, respectively, and the free fiber formation was 0.5% lower. In the 2nd conversion, the purification efficiency was 2.1% and 10.3%, respectively, while the free fiber content was 0.76% less. The presence of 0.86% and 1.42% of free fiber is a major fiber loss and cannot be tolerated. Of course, hand-picked cotton has less free fiber. The free fiber regression equations took the following form.

The spacing (gap) of the supply rollers is 250 mm $Y = 0.67X2 + 2.36X + 015$

When the spacing (gap) of the supply rollers is 300 mm

$Y = 0.045X2 + 0.165X + 0.15$

It was found that the distance (a gap) between the supply rollers also affects the composition of the cotton structure.

Figure 3 shows the process of transferring cotton from the supply rollers to the pile drum, which shows the cotton being transferred to a heap state for cleaning.

© ICAS 2022

FIGURE 3. The process of transferring cotton to the pile drums by the supply rollers

Experiments have shown that the separation of cotton into small pieces depends on the distance between the rollers, which ensures it's splitting. [15]

TABLE 2. Influence of supply roller spacing (gap) on cotton structure composition

The number of fibrous seeds in a piece of cotton	A gap between supply rollers Δ, mm					
	Δ =300			Δ =250		
	Weight in gr.	Amount	Percentage %	Weight in gr	Amount	Percentage
1st run						
1	60,77	339	82,3	54,57	292	78,07
2	13,08	40	9,7	14,99	41	10,96
3	6,08	12	2,9	8,69	17	4,5
4	4,68	7	1,27	7,35	11	2,9
5	5,11	6	1,45	4,42	5	1,3
6	4,72	5	1,2	6,18	7	1,9
7	3,58	3	07	1,01	1	0,3
	100	412	100	100	374	100
2d- run						
1	81,98	463	91	82,17	461	92,2
2	11,39	35	7,0	7,41	22	4,4
3	1,72	4	0,8	5,96	12	2,4
4	2,41	4	0,8	3,63	5	1,0
5	-	-	-	-	-	-

© ICAS 2022

6	-	-	-	-	-	-
7	1,06	1	0,2	-	-	-
	100	507	100	100	500	100

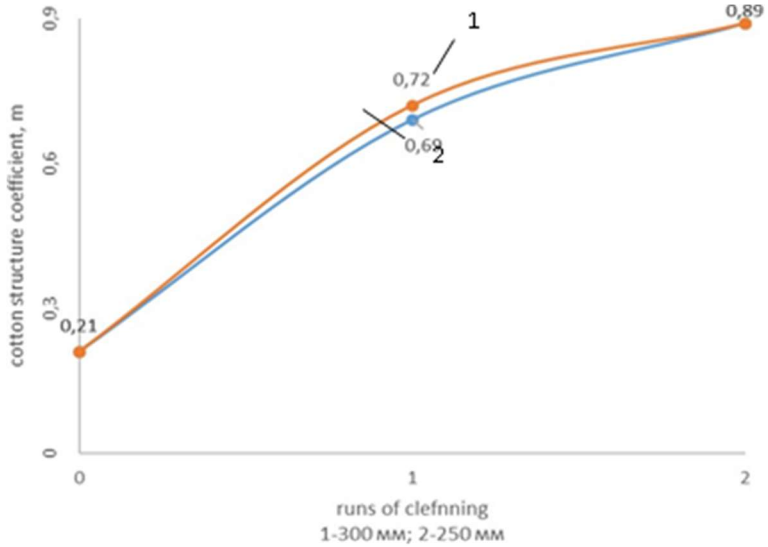

FIGURE 4. Changes in the composition of the cotton structure during cleaning processes

As can be seen from Table 2, when the spacing was 300 mm, single-fiber seeds accounted for 82.3% in the first run, and 250 mm for 78.07%, i.e. the splitting of the cotton into smaller pieces increased the cleaning efficiency. But in the second run, the amount of fibrous individual seeds had the same value in both options. The coefficient of composition of the cotton structure was also m = 0.72 and 0.89, respectively, at intervals of 300 mm in the 1st and 2nd conversions, and m = 0.69 and 0.89 at intervals of 250 mm. That is, a decrease in the density of cotton between the supply rollers leads to an increase in the coefficient m.

CONCLUSION

1. In practice, it has been proven that increasing the distance between the feeding rollers from 250 mm to 300 mm does not adversely affect the stable operation of the feeding mechanism and the control of cotton processing does not deteriorate.
2. It is recommended to set the pitch of the feed rolls to 300 mm. The cleaning efficiency was found to be 6.6% higher when cleaning using 2 saw drums and 8 pile drums and a 4.2% increase was seen when cleaning using 4 sawing drums and 16 piling drums. It was also found that the formation of free fibers by 0.5% and 0.76%, respectively, for 1 and 2 runs are lower at the interval of 250 mm than at the interval of 300 mm.

REFERENCES

1. Tuychiev T.O. Paxtani tozalash texnologik jarayoniga tayyorlash va ta'minlagichni takomillashtirgan holda tozalash mashinasi samaradorligini oshirish. Texnika fanlari bo'yicha

falsafa doktori (Doctor of Philosophy) ilmiy darajasini olish uchun tayyorlangan dissertatsiya, TTESI. (2018), 120 b.

2. Tuychiev T.O., Madumarov I.D., Mardonov B.M. Investigation of the process of release of dirt impurities in the zone of interaction of it with a netlike surface. European Science Review. Vienna,- (2017). - 9-10 - P.208-210.

3. Veliev, F. A study of the influence produced by the dynamics of the working bodies of cotton processing machines on the cotton fibre quality (2021) Eastern-European Journal of Enterprise Technologies, 1 (1-109), pp. 68- 76.

4. Barker, G.L. Analysis of seed cotton cleaning efficiency using GINQUAL (1991) Applied Engineering in Agriculture, 7 (6), pp. 667-672.

5. Patil.P.G., Anap G.R., Arude V.G. Design and development of cylinder type cotton pre-cleaner. Agricultural Mechanization in Asia, Afrikca and Latin Amerika. 2014, ISSN: 00845841.

6. Hardin, R.G., IV, Barnes, E.M., Valco, T.D., Martin, V.B., Clapp, D.M. Engineering and ginning: Effects of gin machinery on cotton quality (2018) Journal of Cotton Science, 22 (1), pp. 36-46.

7. Rajabov, O., Shodiyev, Z., Inoyatov, I., Gapparova, M. Analysis of the technological process of cleaning raw cotton from small trash (2020) International Journal of Emerging Trends in Engineering Research, 8 (9), pp. 6022- 6029.

8. Ruzmetov, R.I., Madumarov, I.D., Mardonov, B.M., Tuychiyev, T.O., Modeling of heat exchange processes between raw cotton and coolant in a screw drum. European science review, Vienna, Prague, (2018), Vollume 5-6, - P.335-338.

9. Madumarov, I.D., Mardonov, B.M., Ruzmetov, R.I., Tuychiyev, T.O. Movement of the trash inside of fiber material when available elastic force of clutch. Engineering, (2018) 10, USA, -P. 579-587.

10. Madumarov I.D., Ruzmetov R.I., Gapparova M.A., Tuychiyev T.O., Changing the Cotton Fiber Temperature. International Journal of Engineering and Advanced Technology (IJEAT) ISSN: 2249 – 8958, Volume-9 Issue-3, February, (2020) – P.974-977.

11. Kurbanova, G.A. Issledovaniye i iziskaniye optimalnix konstruktivnix parametrov pitayushix ustroystv ochistiteley dlya xlopka-sirsa: Avtoref. diss…kand.texn.nauk: - KTI, Kostrama, (1974) – 18 s.

12. Madumarov, I.D., Mardonov, B.M., Tuychiyev, T.O. Issledovaniye dvijeniya letuchki xlopka-sirsa v zone yego vzaimodeystviya s setchatoy poverxnostyu. To‘qimachilik muammolari. – (2017) 3 – s 21-26.

13. Madumarov, I.D., Mardonov, B.M., Tuychiyev, T.O. Analiz uxoda sorinok iz voloknistoy massi pri yego prostranstvennom dvijenii. To‘qimachilik muammolari.– (2018) 2. P 27-31.

14. UZ patent No. FAP 01495. Paxta xom ashyosini tozalagichi. Tuychiyev T.O., Parpiyev A.P., Xodjiyev M.T., Lugachev A.YE., Madumarov I.D. Byulleten 1, (2020).

15. Parpiev, A., Sharakhmedova, M., Parpiev, A. Analysis of deformation of Cotton in Technological processes. International Journal of Emerging Trends in Engineering Research, 8(9), September 2020, 6618 – 6622